RENAULT FUEGO: ENGINE BAY WIRING – AT THE BULKHEAD
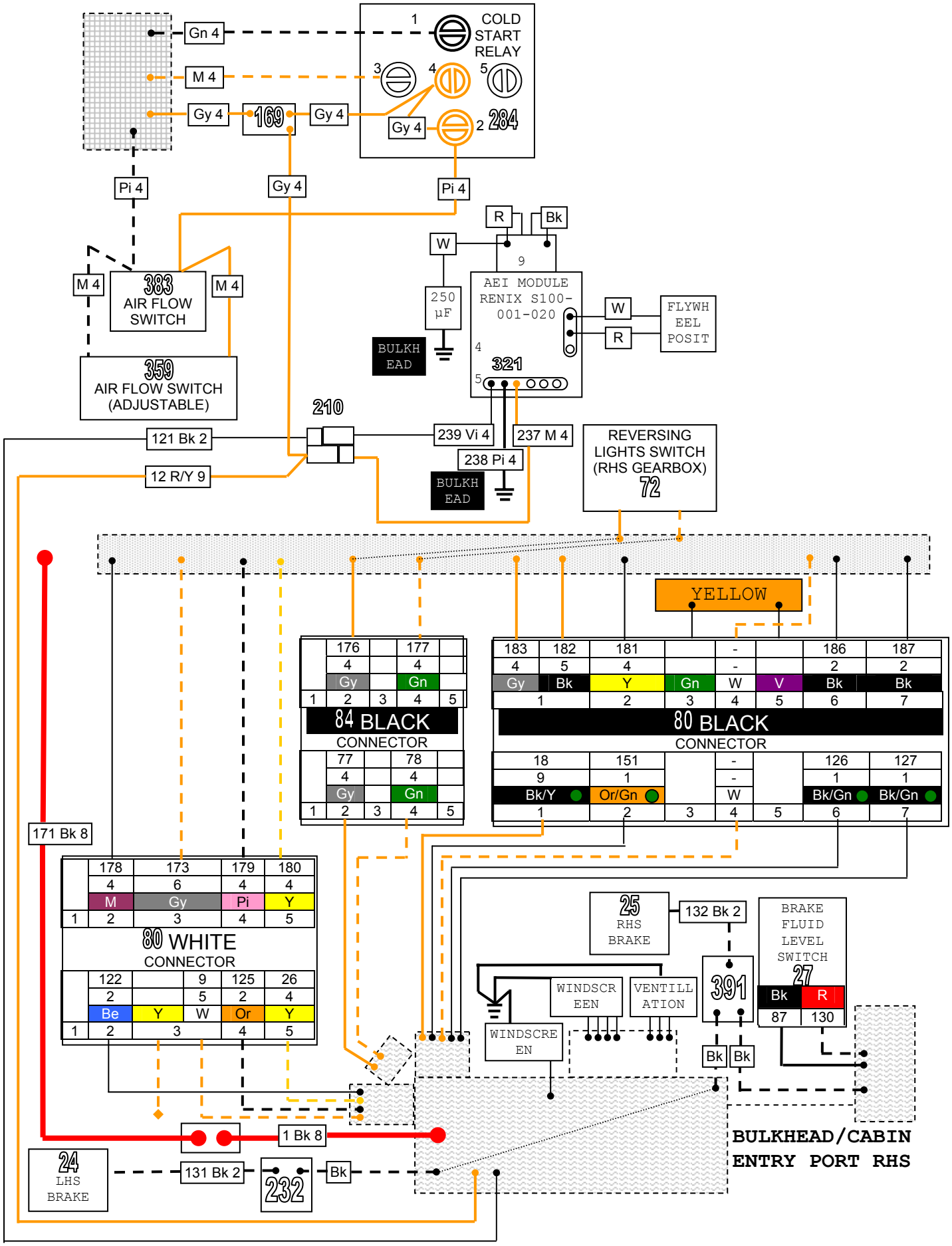
2